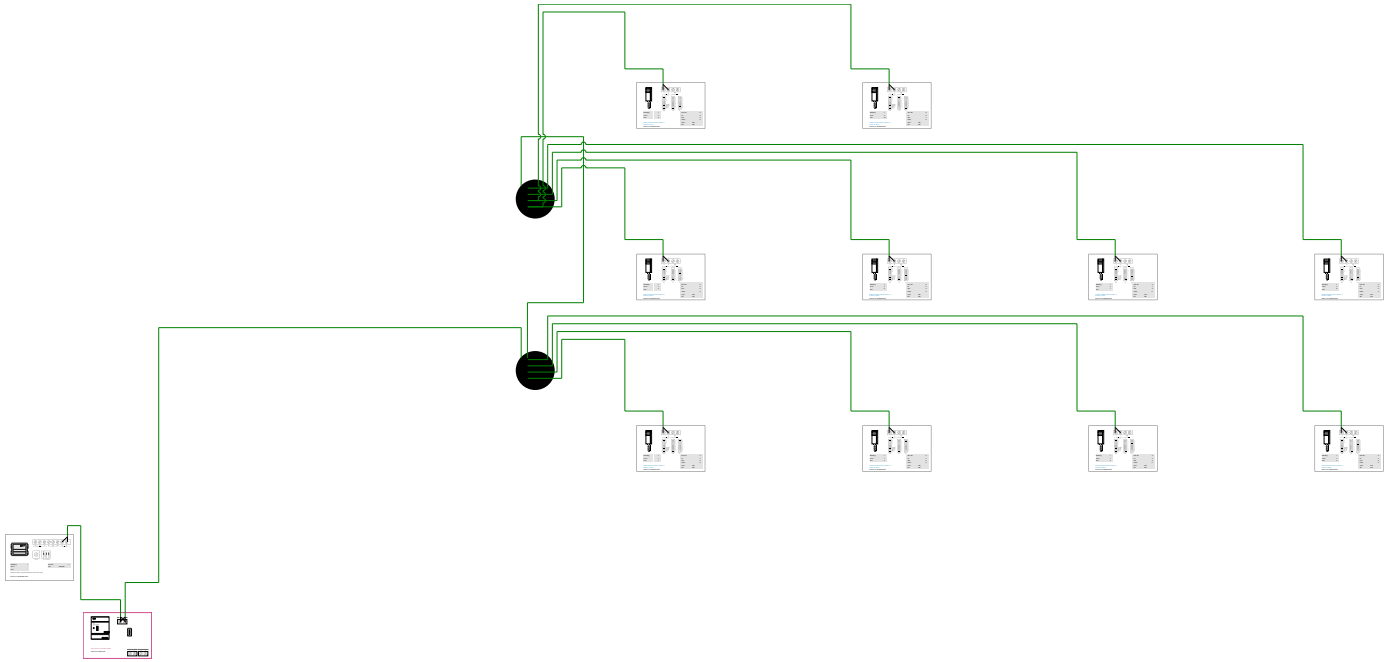Wiring Diagram